Meteor Filter System Owner's Manual

IMPORTANT SAFETY INSTRUCTIONS
READ AND FOLLOW ALL INSTRUCTIONS
SAVE THESE INSTRUCTIONS

Table of Contents

SECTION I. Pump Safety Instructions 2

SECTION II. How Your Filter Works 3

SECTION III. Installation 3

SECTION IV. Initial Start Up 7

SECTION V. Cleaning Frequency 8

SECTION VI. Filter and Control Valve Functions 8

SECTION VII. Filter Backwash Procedures 8

SECTION VIII. Winterizing the Filter 9

SECTION IX. Troubleshooting 9

SECTION X. Technical Data 10, 11

SECTION XI. Pump Instructions 12

⚠ WARNING

Before installing this product, read and follow all warning notices and instructions accompanying this filter. Failure to follow safety warnings and instructions can result in severe injury, death, or property damage.
Call (800) 831-7133 for additional free copies of these instructions.

Important Notice

Attention Installer.

This manual contains important information about the installation, operation and safe use of this product. This information should be given to the owner/operator of this equipment.

Pentair Pool Products
1620 Hawkins Ave., Sanford, NC 27330 • (919) 774-4151
10951 West Los Angeles Ave., Moorpark, CA 93021 • (805) 523-2400

Pentair Pool Products®
*Because **reliability** matters most*

IMPORTANT NOTICE

Attention Installer
This manual contains important information about the installation, operation and safe use of this product. This information should be given to the owner/operator of this equipment.

⚠ WARNING

Before installing, read and follow all warning notices and instructions accompanying this filter. Failure to follow safety warnings and instructions can result in severe injury, death, or property damage. Call 1-800-931-7133 for additional free copies of these instructions.

PUMP SAFETY INSTRUCTIONS

When installing and using this electrical equipment, basic safety precautions should always be followed, including the following:

1. READ AND FOLLOW ALL INSTRUCTIONS.

2. WARNING – To reduce the risk of injury, do not permit children to use this product unless they are closely supervised at all times.

3. WARNING – Risk of Electric Shock. Connect only to a grounding type receptacle protected by a ground-fault circuit-interrupter (GFCI). Contact a qualified electrician if you cannot verify that the receptacle is protected by a GFCI.

4. Do not bury the electrical cord. Locate the cord to minimize abuse from lawn mowers, hedge trimmers, and other equipment.

5. WARNING – To reduce the risk of electric shock, replace damaged cord immediately.

6. WARNING – To reduce the risk of electric shock, do not use an extension cord to connect unit to electric supply; provide a properly located outlet.

7. CAUTION – For continued protection against possible electric shock, this unit is to be mounted to the base in accordance with the installation instructions.

SAVE THESE INSTRUCTIONS.

Section II. How Your Filter Works.

Your high rate sand filter is designed to produce clear, sparkling water and operate for years with a minimum of maintenance when installed, operated and maintained in accordance with these instructions.

Your filter uses special filter sand to remove dirt particles from the water. Dirt is collected in the filter by the sand bed as water flows through the filter. Water enters the filter through the valve on top of the filter and is distributed evenly downward across the sand bed. The dirt is removed by the sand and the clean water flows through the piping (laterals) at the bottom of the filter, up through the center pipe, back to the valve on top of the filter, where the clean water is returned to the pool through the piping or hoses.

After a period of time, dirt will accumulate in the filter causing a resistance to the flow of water through the filter. This resistance results in a diminished flow of water and a rise in the pressure of the filter. Eventually the filter sand will have removed so much dirt and the filter pressure risen to such a point that it will be necessary to clean (backwash) your filter.

By setting the valve on top of the filter to the backwash position, the flow of water is automatically reversed through the filter so that the flow of water is directed to the bottom of the filter, up through the sand bed flushing, the dirt and debris out through the waste line. Once the backwash procedure is complete, the valve is manually returned to its filter position to resume normal filtration.

The filter's function is to remove suspended matter from the water and does not sanitize the water. For sparkling clear water the water must be sanitized as well as balanced. Pool chemistry is a specialized area, and you should consult your local pool service specialist for specific details. In general, proper pool sanitation requires a free chlorine level of 1 to 2 PPM and a PH range of 7.2 to 7.6.

⚠ WARNING

Failure to operate your filter system or inadequate filtration can cause poor water clarity obstructing visibility in your pool. Poor water clarity may obscure objects in the water which while swimming and diving could cause severe personal injury or death. Never swim in a pool with poor water clarity.

Your filtration system should be designed to meet your local health codes. As a minimum, you must be sure that your system will turnover the total volume of water in your pool at least twice in a twenty-four hour period.

⚠ WARNING

Failure to operate your filter system or inadequate filtration can cause poor water clarity obstructing visibility in your pool and can allow diving into or on top of obscured objects, which can cause serious personal injury or drowning.

Section III. Installation.

1. Read and understand all instructions before attempting to install, operate or maintain your pump and filter system. Due to the different models some instructions may not apply to your specific system or certain instructions may be duplicated in other component manuals.

2. Provide space and lighting for routine maintenance access. Locate the system close to the pool. See Diagram C for typical system installation.

Do not mount electrical controls over the filter. One needs to be able to stand clear of the filter when starting the pump. Systems that are unassembled should be assembled at this point. See special instructions A thru E below.

A. Remove all individual components from carton and inspect for any visible damage. If carton or parts are damaged contact seller or freight company.

B. Place the system support base on the ground close to the final location of the unit.

DIAGRAM A

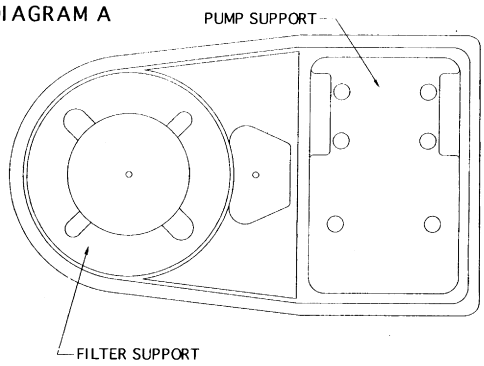

C. Examine the bottom of the filter and confirm the orientation of the four small mounting protrusions on the tank.

D. Align the protrusions on the tank with the dimples in the filter support portion of the base and place the filter on the base.

E. The pump may now be attached to the pump support side of the base using two bolts. The pumps should be positioned as indicated in Diagram B.

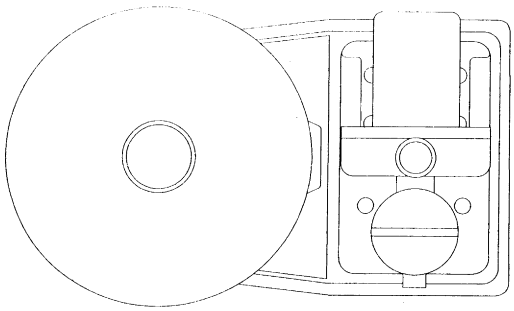

DIAGRAM B

3. At this point you need to move the system into its final position. The system must be placed on level solid earth. The entire system filled with sand and water can weigh several hundred pounds.

4. Be certain to install the precise amount of filter sand listed on your filter nameplate. You must use only No. 20 standard silica sand having a uniformity coefficient of 1.75 or less. No. 20 silica sand has a particle size of .018-.022 inches (.45 to .55 mm). Before pouring the sand into the filter, look inside and check the lower underdrain for broken or loose laterals (or fingers), which may have been accidentally damaged by rough handling during shipment. Replace any broken parts if necessary.

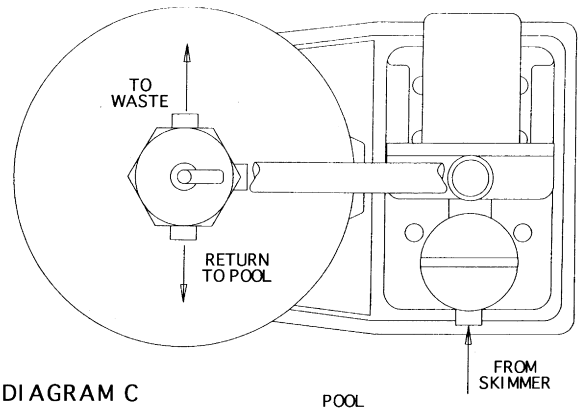

DIAGRAM C

5. Install the sand guide in the top of the filter and fill the tank about half full with water. Pour the sand into the top of the filter at a slow rate so that the weight of the sand does not damage the laterals. After filling to the proper level, remove and discard the sand guide. Wash away all sand around the opening at the top of the tank.

6. Be sure top of filter is free of any sand or debris and valve o-ring is in place on valve body. Install valve so that the port locations are in the desired final position. See Diagram C.

7. Insure that the valve is firmly pushed into the top of the tank and that the flange of the tank and the flange of the valve are contacting each other. See Diagram D.

DIAGRAM D

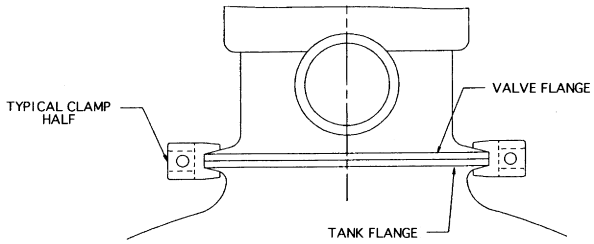

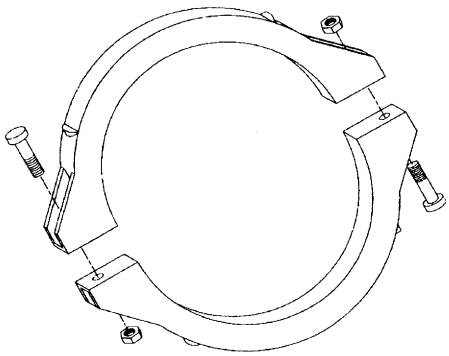

8. The plastic clamp can now be installed. Place the clamp half over the valve flange and the tank flange as shown in diagram D. Insert the valve screws and nuts into the clamp half making sure that the nuts are located in the special hexagonal retainer slots on the clamps. See Diagram E.

9. Tighten clamp screws firmly and visually check the valve tank and clamp assembly to insure that the joint is correctly assembled.

⚠ WARNING

Improper tank valve assembly could cause the valve to blow off and cause severe injury and/or property damage.

10. **Valve ports are labeled with the location of where they should be connected i.e. pump port must** go to pump discharge, waste port must go to the waste line and return port must go to the pool return.

11. The filter unit has a maximum operating pressure listed on the filter name plate. **DO NOT OPERATE this unit above the maximum operating pressure of the valve or the filter.** Never connect the filter and valve unit to a pump which can generate a pressure that exceeds the operating pressure of the filter or valve.

12. Use sealant on all tapered male connections of pipe and fittings. Use only sealant compounds suited for plastic pipe. Support pipe to prevent strains on filter, pump or valve. **DO NOT USE PETROLEUM BASED PRODUCTS. NOTICE: All valve Internal threads are tapered except the air bleeder connection. Do not over tighten tapered thread connection.**

13. Install pressure gauge in 1/4" NPT port directly across from the pump port of the valve.

14. Never store pool chemicals within 10 feet of your pool filter, pump or valve. Pool chemicals should always be stored in a cool, dry, well ventilated area.

⚠ WARNING

Chemical fumes and/or spills can cause severe corrosive attack to the filter and pump structural components. Structurally weakened components can cause filter, pump or valve attachments to blow off and could cause severe bodily injury or property damage.

⚠ WARNING

The system's centrifugal pump operates with electrical voltage, and can generate both vacuum and pressure in the water system. When properly wired and plumbed, this pump will operate in a safe manner.

⚠ WARNING

Hazardous voltage - can cause severe or fatal injury. Always install a suitable GFCI at the power source of this unit as an added safety precaution. Article 680-31 of the NEC requires that a GFCI be used if this pump is used with storable pools.

15. Avoid over tightening the pipe threads when connecting fittings to the pump or valve. Proper procedure is to apply a pipe sealant to the thread and then install hand tight plus 1 turn. **DO NOT OVER TIGHTEN.**

16. The pump suction line should not be smaller than the pipe size on the inlet of the pump.

17. Electrical connection of the pump should be performed by a licensed electrician in accordance with the National Electrical Code or your local electrical code.

RECOMMENDED CIRCUIT BREAKER AND WIRING DATA

Motor HP	Branch Circuit	Volts/Hz /Phase	Dist. in Ft. of Branch Circuit		
			0-50 Ft.	50-100 Ft.	
3/4	15 AMP	115/60/1	#14	#14	Min. Service
1	15 AMP	115/60/1	#12	#12	Wire
1-1/2	20 AMP	115/60/1	#12	#10	Size
1-1/2	15 AMP	230/60/1	#14	#14	To Motor

⚠ WARNING

Blockage of suction fittings can cause severe or fatal injury due to drowning. Small children using pool/spa equipment must always have close adult supervision. To reduce the risk of injury, do not permit children to use this product unless they are closely supervised at all times.

⚠ WARNING

Never work on pump while it is running or power is still connected; Hazardous voltage can cause severe or fatal injury. A suitable ground fault interrupter should always be installed at the power supply source of this unit.

Ground motor before connecting to electrical power supply. Failure to ground motor can cause severe or fatal electrical shock hazard. Do not ground to a gas supply line.

18. Use lug on top of motor frame to bond together motor and all metallic parts of pool, spa, or hot tub structure and all electrical equipment, metal conduit, and metal piping with a solid copper conductor not less than No. 8 A.W.G.

19. The pump motor must be wired for the proper voltage in accordance with the wiring diagram supplied with the motor. **(Wiring the motor with the incorrect supply voltage will cause damage to the motor and void the warranty.)**

20. The wiring to the motor should be kept as short as possible and large enough NOT to cause an excessive voltage drop which could damage your pump. Use the chart above as a guide to ensuring adequate voltage is supplied to the pump.

When checking the pump operation without water do not run the unit longer than 30 seconds. Damage to the pump on mechanical seal could result if ran longer than 30 seconds.

WARNING
FOR CORD AND
PLUG-CONNECTED UNITS

RISK OF ELECTRICAL SHOCK - Connect only to a grounding type receptacle protected by a ground Fault Circuit Interrupter (GFCI). Contact a qualified electrician if you cannot verify that the receptacle is protected by GFCI.

Do Not Bury Cord. Locate cord to minimize abuse from lawn mowers, hedge trimmers, and other equipment.

To reduce the risk of electric shock, replace damage cord immediately.

To reduce the risk of electric shock, Do Not Use an extension cord to connect unit to electric supply; provide a properly located outlet.

Section IV. Initial Start Up.

1. Be sure the correct amount of Silica filter sand is in the tank and that all connections have been made and are secure.

2. Check that the backwash is open so that water is free to flow from the pool and out the backwash line. Set the control valve to Backwash position.

⚠ WARNING

This filter operates under pressure. With the valve clamped properly and operated without air in the system, this filter will operate in a safe manner. Air entering the filter and the valve not clamped correctly can cause the valve to be blown off, which could cause severe personal injury and/or property damage.

⚠ CAUTION

Always turn pump off before changing valve positions. Changing valve positions while the pump is running can damage the control valve, which may cause personal injury or property damage.

3. **Stand clear of the filter.** Prime and start pump according to the pump instructions allowing the filter tank to fill with water. Once the water flow is steady out of the waste line, run the pump for at least two minutes. This initial backwashing of the filter is recommended to remove any impurities of fine sand particles in the Silica sand media.

4. Turn the pump off and set valve to rinse position. Ensure that all pool suction and return lines are open so that the water is free to flow from the pool to waste. **Stand clear of filter** and start the pump.

5. Run the pump for at least two minutes.

6. Turn the pump off and set valve to filter position. Ensure that all pool suction and return lines are open so that water is free to flow from and to the pool. Stand clear of filter and start the pump.

7. Your filter has now started its filtering cycle. You should check that water is returning to the pool and take note of the operating pressure. My original starting pressure is _____ PSI with the filter clean.

⚠ CAUTION

To prevent damage to the pump and filter and for proper operation of the system, clean pump strainer and skimmer baskets regularly.

8. Check the system for water leaks. If a leak is found, shut pump off before correcting the leak.

9. As the filter removes dirt and impurities from the pool water, the accumulation will cause the filter pressure to rise and flow to diminish. When the pressure gauge reading is 5 to 7 PSI higher than the clean filter reading noted above, it is time to backwash the filter.

Section V. Cleaning Frequency.

1. Cleaning frequency will vary from pool to pool and with other factors such as weather condition, heavy rains, dust, pollen, bather load, and water chemistry. Check the pressure gauge reading on a regular basis and when the pressure gauge reading increases 5 to 7 PSI over the initial clean filter reading, it is time to backwash your filter.

2. It is important NOT to backwash the filter solely on a timed basis such as every two days. It is also important to note that backwashing too frequently actually causes poor filtration.

Section VI. Filter and Control Valve Functions.

FILTER - From pump, through valve, downward through filter sand bed, up through center pipe to valve return port, and back to the pool for normal filter action and vacuuming pool through filter.

BACKWASH - From pump, through valve down through center pipe, up through filter sand to valve, and out waste port. This position is used for cleaning filter by reversing flow.

RINSE - From pump through valve downward through filter sand, up through center pipe to valve and out waste port. This position is used for start up cleaning and resettling filter bed after backwashing.

WASTE - From pump, through valve (bypasses filter) and goes to waste port. This position is for vacuuming directly to waste, lowering pool level, or draining pool.

CLOSED - NO FLOW IN THIS POSITION – DO NOT USE THIS SETTING WITH PUMP OPERATING.

RECIRCULATE - From pump, through valve, bypasses filter and goes to return port and back to pool. This position is for circulating water without going through filter.

WINTERIZING - Valve position for a winterized filter, see page 10.

Section VII. Filter Backwash Procedures.

⚠ WARNING

Failure to operate your filter system or inadequate filtration can cause poor water clarity obstructing visibility in your pool. Poor water clarity may obscure objects in the water which while swimming and diving could cause severe personal injury or death. Never swim in a pool with poor water clarity.

1. Turn off pump.

2. Ensure that suction and backwash lines are open so that water is free to come from the pool and flow out the backwash line. Set the control valve to backwash position.

3. **Stand clear of the filter** and start pump.

4. Backwash filter for approximately 3-5 minutes or until backwash water is clean.

5. Turn off pump. Set control valve back to rinse position.

6. **Stand clear of the filter** and start pump.

7. Rinse filter for approximately 3-5 minutes.

8. Turn off pump. Set control valve back to filter position.

9. **Stand clear of the filter** and start pump.

10. The filter has now started its filtering cycle. Check that water is returning to the pool and take note of the filter pressure.

11. The filter pressure in step 10 above should not exceed the pressure originally observed on the filter when it was initially started. If after backwashing the pressure is 4-6 PSI above the start condition, it may be necessary to change the sand in the filter.

Section VIII. Winterizing the Filter.

1. In areas that have freezing winter temperatures, the pool equipment must be winterized to protect it from damage.

2. Backwash the filter. Shut off the pump and set the control valve to the winterize position.

3. Remove the drain port cap at the bottom of the filter.

IMPORTANT NOTE

Remove drain port cap only for draining water from filter. Removing the entire fitting will allow sand to drain also. *The filter will drain slowly. Leave the drain port cap off and store it during the time the system is shut down.*

⚠ CAUTION

The control valve should be left in the winterize position during the shutdown season so that the rubber seal of the valve diverter has no pressure on it. Failure to do so can damage the valve diverter seal which can cause property damage from leaking water.

4. Drain all appropriate system piping.

5. It is recommended that the pump and filter be covered with a tarpaulin or plastic sheet to inhibit deterioration from the weather. DO NOT wrap pump motor with plastic.

Section IX. Troubleshooting.

Problem	Cause	Remedy
Pool water not sufficiently clean.	1. Pool chemistry not adequate to inhibit algae growth.	Maintain pool chemistry or consult pool service technician.
	2. Too frequent a backwash cycle	Allow pressure to build to 10 PSI above clean filter condition before backwashing.
	3. Improper amount or wrong sand size.	Check sand bed depth and sand size or consult pool service technician.
	4. Inadequate turnover rate.	Run system for longer time or consult dealer or pool service technician.
Higher filter pressure.	1. Insufficient backwashing.	Backwash until effluent runs clear.
	2. Sand bed plugged with mineral deposits.	Chemically clean filter.
	3. Partially closed valve or restriction.	Open valve or remove obstruction in return line.
Short filter cycles.	1. Improper backwashing.	Backwash until effluent runs clear.
	2. Pool chemistry not adequate to inhibit algae growth.	Maintain pool chemistry or consult pool service technician.
	3. Plugged sand bed.	Manually remove top 1" surface of sand bed and chemically clean as required.
	4. Flow rate too high.	Restrict flow to capacity of filter.
Return flow to pool diminished, low filter pressure.	1. Obstruction in the pump hair and lint pot.	Clean basket in strainer.
	2. Obstruction in pump.	Disassemble and clean pump.
	3. Obstruction in suction line to pump.	Clean skimmer basket. Remove obstruction in lines. Open valves in suction line.
Sand returning to pool.	1. Broken underdrain lateral.	Replace broken or damaged laterals.
	2. Backwash rate too high.	Reduce backwash flow rate.

Section X. Technical Data

Replacement Parts List - 6 Way Valve

Item	Part No.	Description	Qty.
1	27-2520	Handle	1
2	27-2505	Washer-Plastic	2
3	27-2405	Screw-Handle	1
4	27-2527	Valve Top - Black	1
5	27-2511	O-Ring-Diverter Shaft	1
6	35-4053	O-Ring	1
7	27-2535	Spring - 100 Lb. - 1 3/8 O.D. SS	1
8	27-2512	Diverter W/Gasket	1
9	35-4636	Screw #10-24 Hex Pan HD	6
10	15-2946	Washer 9/16 SS	6
11	15-2945	Nut - #10-24 Serrated Flange SS	6
12	27-2530	Valve Body W/Differ - Clamp Style	1
13	27-3512	Air Bleeder W/O-Ring	1
14	27-2541	O-Ring - 3/16" x 4 5/8" I.D.	1
15	15-2165	Clamp Assembly (See Note 2)	1
16	15-5050	Pressure Gauge	1
17	15-2166	Clamp Half	2
18	15-2168	Screw #M6X1 Pan HD Phillips SS	2
19	15-2167	Nut #M6SS	2

NOTE:

1. Valve Top Assembly P/N 27-2531 consists of items 1 thru 8 and valve instructions 27-2517.
2. Clamp Assembly P/N 15-2165 consists of items 17 thru 19.

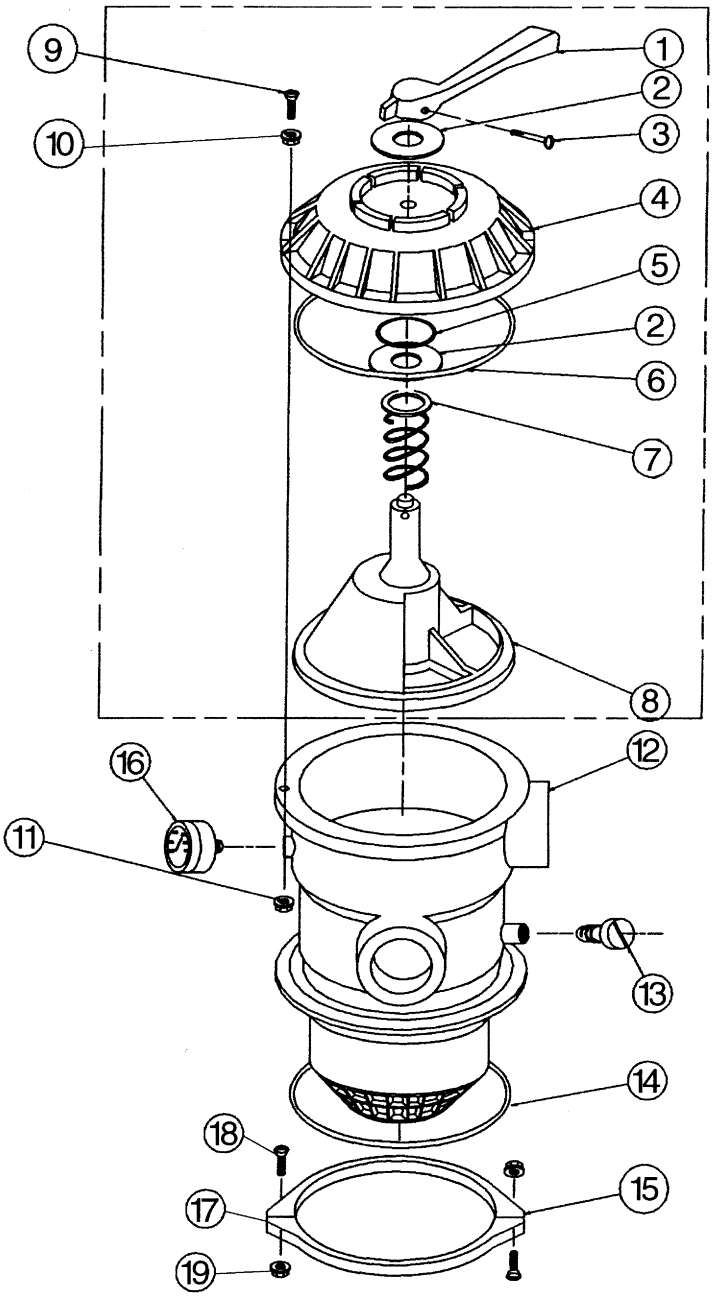

Section X. Technical Data

Replacement Parts System

Item No.	Part No.	Description
1	272526	Valve
2	152166	Clamp
3	152167	Nut
4	154711	Drain
5	154715	Gasket
6	154712	Cap
7	152223	Internal assm 18"
7	152224	Internal assm 20"
7	152225	Internal assm 22"
8	150084	Lateral, Long (18" 20")
8	150085	Lateral, XLong (22")
9	152901	Base
10	See Dealer Pump	
11	155662	20" Quick Connect Hose
11	155663	22" Quick Connect Hose
11	155664	24" Quick Connect Hose
12	152168	Screw
13	150055	Drain Assm, Complete
14	155655	18" Replacement Tank
14	155656	20" Replacement Tank
14	155657	22" Replacement Tank
15	272541	O-Ring
16	190059	Gauge with Indicator
17	U78-767P	Adaptor, hose 1 1/2"
18	711004	Hose Clamp
19	155153	6' Hose

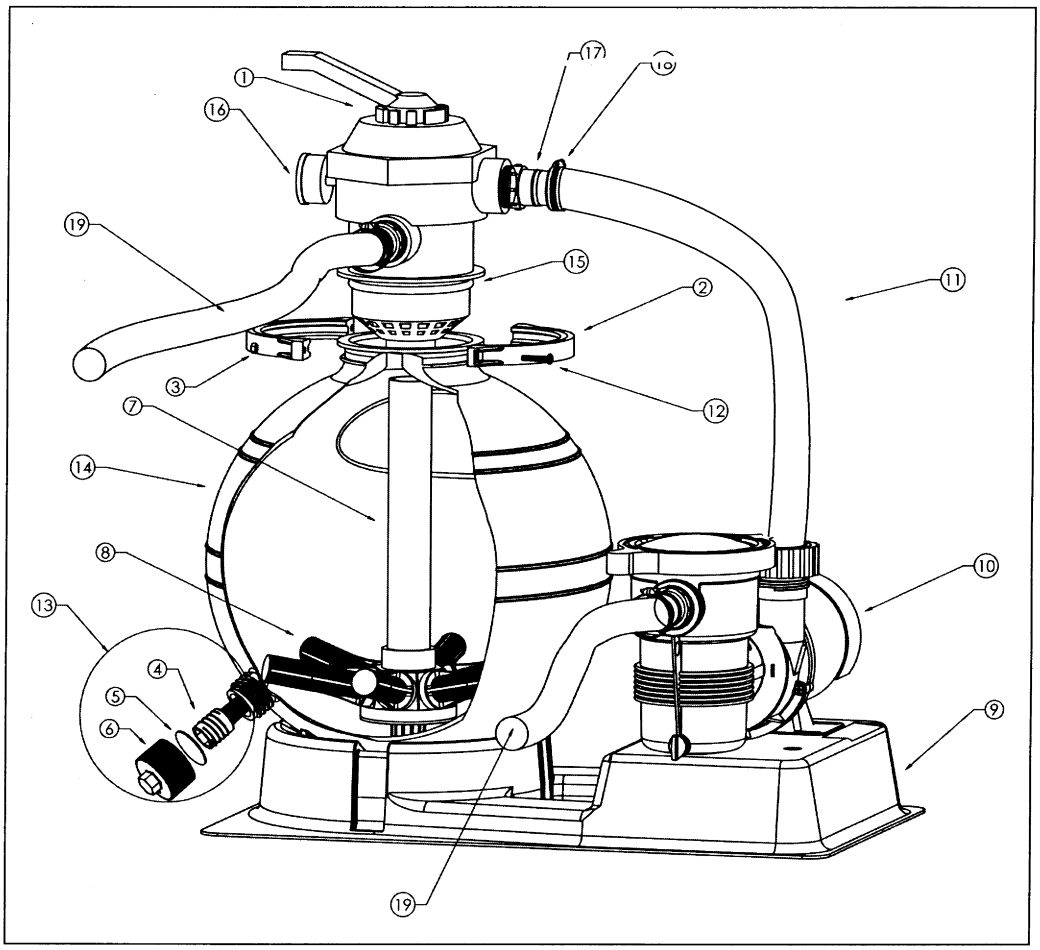

Section XI. Pump Instructions.

⚠ CAUTION

To reduce the risk of electric shock, do not use an extension cord. Only connect to a GFCI protected receptacle. Failure to do so could result in an electrical shock to pool users, installers, or others which can result in serious personal injury or death.

1. To prime pump - (pump must be off).
   Unscrew lid from pot and fill pot with water to level of suction line. Inspect O-ring, lubricate with silicone lubricant. Screw lid into pot, hand tighten, lid shoulder will come to rest on pot surface. Turn pump on, depending upon elevation above water level and horizontal distance of suction line, priming time will vary. If filter is installed, open air relief valve, before turning pump on, until a steady stream of water comes out, then close air relief valve. Pump is now primed. If pump is installed below water level, close return line prior to filling hair/lint pot with water. Line must be reopened before turning pump on.

2. To clean basket - (pump must be off).
   Follow procedure above to prime pump. After removing lid, remove basket and empty debris. Replace basket and proceed to fill pot with water. It is important to visually inspect the basket, through the see through lid, at least once a week. A dirty basket will reduce the efficiency of your system, and can put an abnormal load on the pump which could result in costly repair bills.

⚠ CAUTION

DO NOT RUN PUMP DRY. If pump is run dry, the mechanical seal will be damaged and external leakage will occur. When a seal is damaged, the seal must be replaced.

⚠ CAUTION

ALWAYS MAINTAIN PROPER WATER LEVEL IN THE POOL. Water level must be half way up the skimmer opening. A low water level can cause the pump motor to run dry which will damage the mechanical seal and cause external leakage.

3. Shaft Seal - (Rotary Seal). The shaft seal consists of two parts:

   a. Rotating ceramic seal, pressed fit into the impeller.

   b. A stationary spring loaded seal, press fitted into the rear of the volute.

⚠ CAUTION

The highly polished and lapped faces of the seal are easily damaged. Handle with care. This centrifugal pump requires little or no service, however, the shaft seal will wear with normal use over the years, and will requrie periodic replacement.

4. The electric motor

   a. The electric motor should be protected from foreign matter, water splashing, hosing and the weather. Enclosures should be well ventilated to prevent overheating. If a motor becomes wet, permit it to dry before running it. If a motor has been damaged by water or dirt, the warranty is void.

   b. The motors used on these pumps are 48 frame through bolt motors. The through bolts are used to secure the volute to the motor. When replacing motor, mark the end bells and the motor shell to indicate alignment. Remove the four nuts from the through bolts at shaft end. Place shaft through back of volute and locate through bolts in line with brass inserts located in four legs at rear of volute, be sure end bell and shell marking line up. Securely fasten motor to volute.

   c. Protect motor from heat. Provide ample ventilation.

   d. Protect motor from dirt and chemicals. Keep motor, motor vents and surrounding area clean. Avoid sweeping or stirring up dust near the motor while it is running. Avoid stirring (or spilling) water chemicals near the motor.

   e. Protect motor from moisture. Provide protection from rain, snow, lawn sprinklers, etc. Locate motor on a slight elevation so that water will not run or puddle nearby. Do not splash water on or near the motor.

NOTES

NOTES

NOTES

SAVE THESE INSTRUCTIONS

Pentair Pool Products
1620 Hawkins Ave., Sanford, NC 27330 • (919) 774-4151
10951 West Los Angeles Ave., Moorpark, CA 93021 • (805) 523-2400

Pentair Pool Products®
*Because **reliability** matters most*